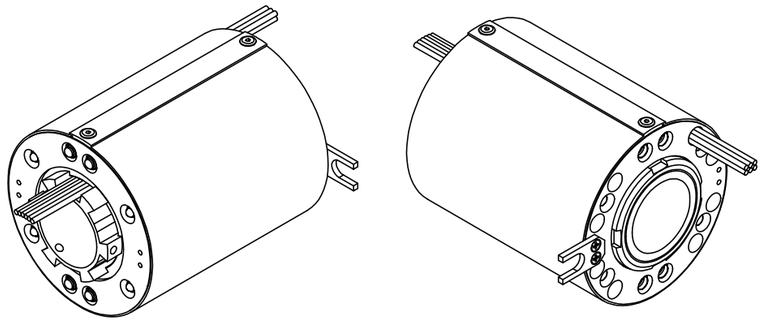

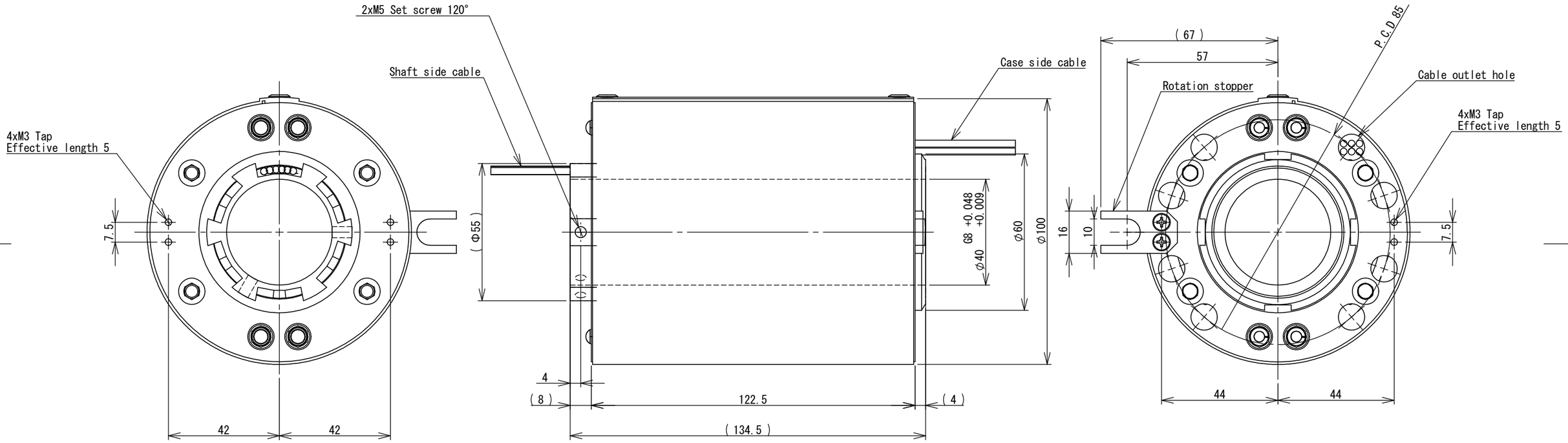


【Notes】

(1)Cable type and cable outlet hole position varies depending on specification.

(2)Specification and parts used may be changed without notice for product improvement.

| | | | |
|---|---|---|---|
| SCALE | 1:1.5 | PARTS NAME | High-performance Hollow integrated type Slip Ring HA Series |
| SIZE | A3 | PARTS No. | HA-N040G100A020-L134.5 |
| UNIT | mm | DRAW NAME | Dimensions |
| DATE | 10/1/2025 | DRAW No. | SRK2309022-AD-AE01 |
| | | | KYOEI ELECTRIC CO.,Ltd. |