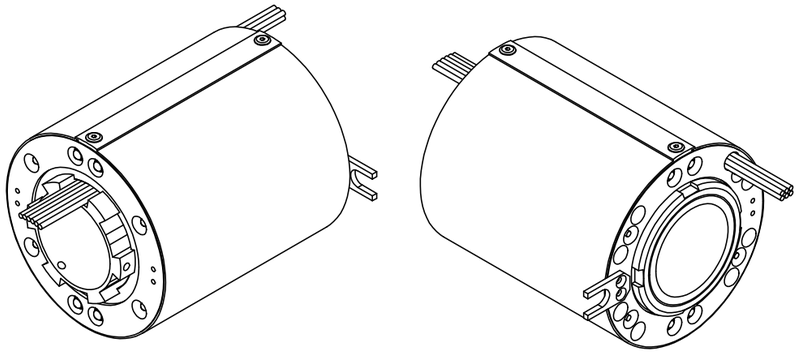

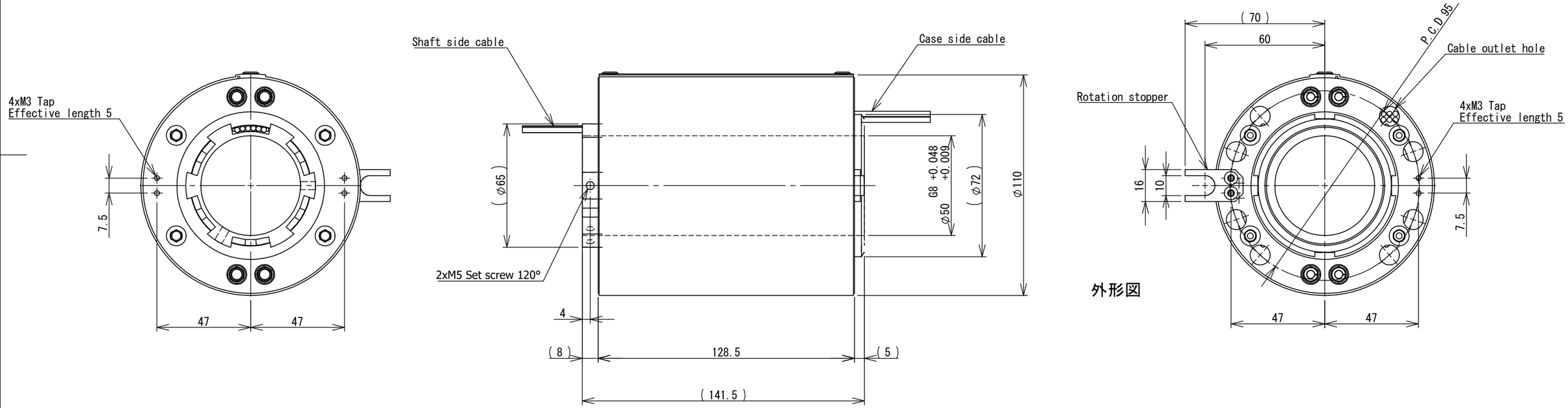

外形図

【Notes】

(1)Cable type and cable outlet hole position varies depending on specification.

(2)Specification and parts used may be changed without notice for product improvement.

SCALE	1:2	PARTS NAME	High-performance Hollow integrated type Slip Ring HA Series
SIZE	A3	PARTS No.	HA-N050G110A020-L141.5
UNIT	mm	DRAW NAME	Dimensions
DATE	10/1/2025	DRAW No.	SRK2309022-BD-AE01
			KYOEI ELECTRIC CO.,Ltd.